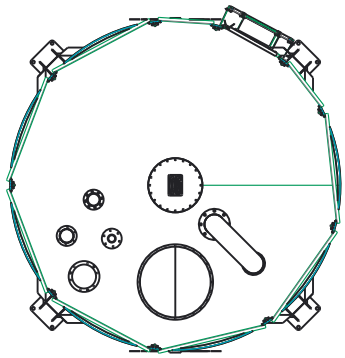

Top Overhead View

Shown with Standard Features
- Pressure Relief Valve
- Man Access Hatch
- Dust Collector Flange
- Pressure Switch Flange
- High/Low Level Couplings
- Ladder w/ Fall Arrest Cable
- OSHA Approved Handrail, Toe Kick and Gate
- Aeration Pads in Hopper

- Barrel Capacity per 5 Barrel/Cu.Ft.
- Ton Capacity per 94 lbs/Cu.Ft. Density

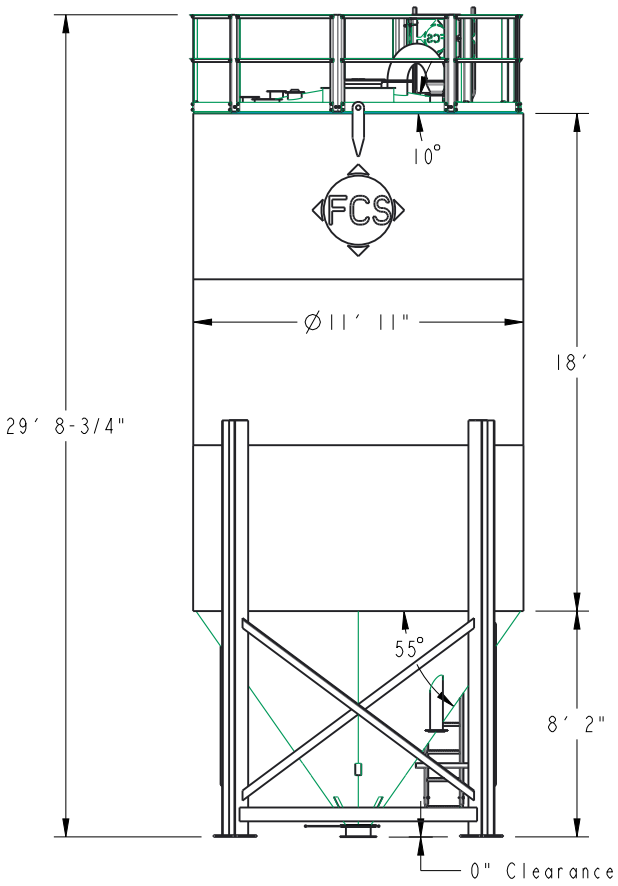

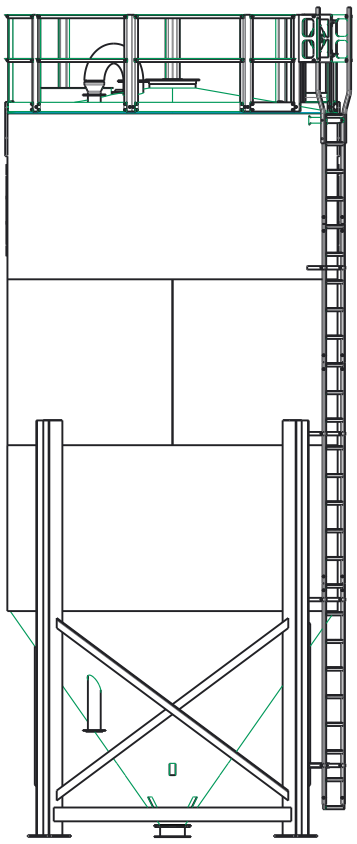

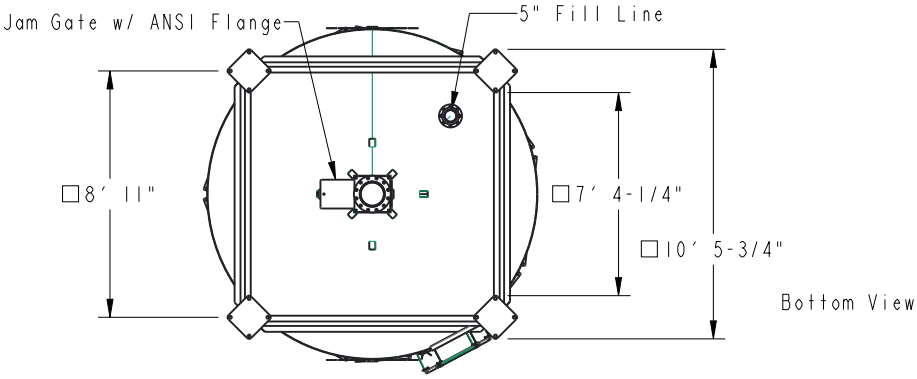

Bottom View

FCS Mfg.

FCS MFG. INC.
3430 EE. ROAD
GRIDLEY, KS 66852
(620) 427-4200

THIS DRAWING AND THE DESIGN FEATURES
DISCLOSED ARE PROPERTY OF FCS MFG INC. AND SHALL
NOT BE REPRODUCED WITHOUT WRITTEN PERMISION

REVISED BY:	ALUTHI
DATE:	10/19/2022
WEIGHT:	10380 LBS

CU1224 W/ 55° HPR

2525 cu.ft. or 109 Ton or 580 Barrels

RND-1218-55-01